Easy to Follow Instructions

5124237 Lunging Demon Dog

Parts List:

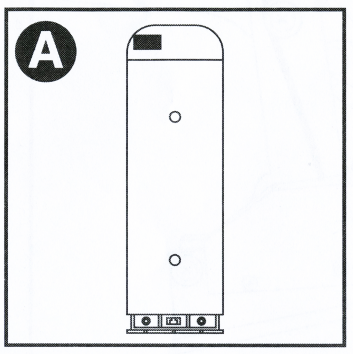

Front leg

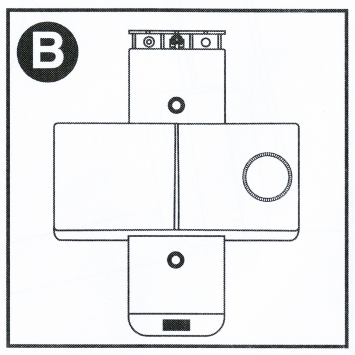

Back Leg

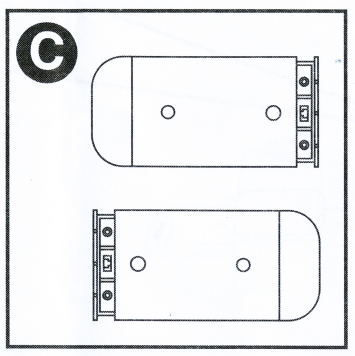

Right and Left legs

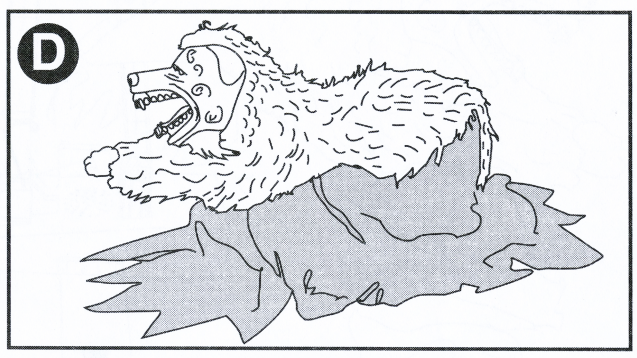

Character with Mechanism

Step Here Pad

UL Power Adapter

UL Power Adapter
Specification:
Input: 120V~ 60Hz
Output: 6VDC 1000mA

Only use adapter with same technical specification.

Assembly Instructions:

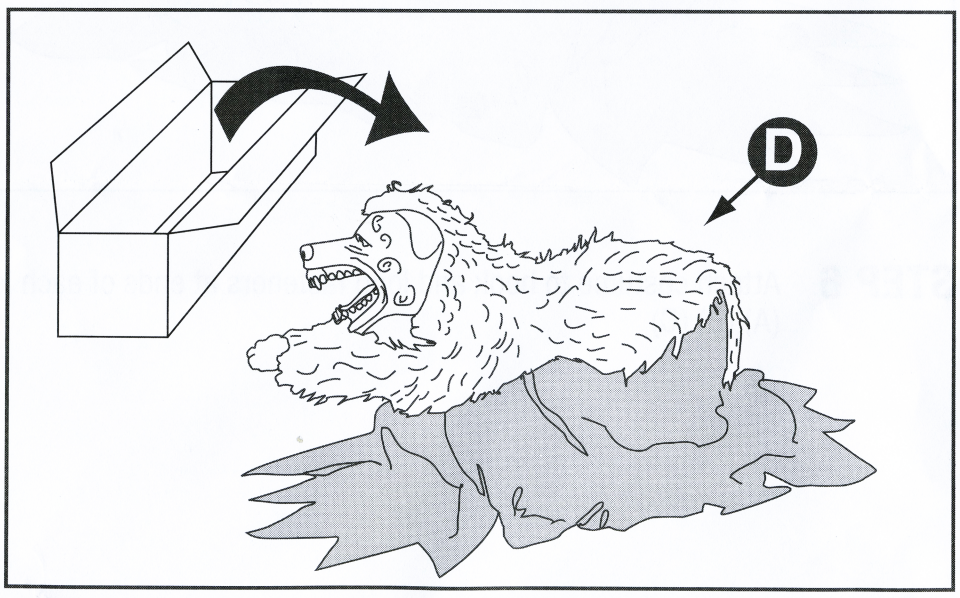

STEP 1 Remove all parts from Box. Place character with mechanism (D) flat on the floor with the bottom of the base down.

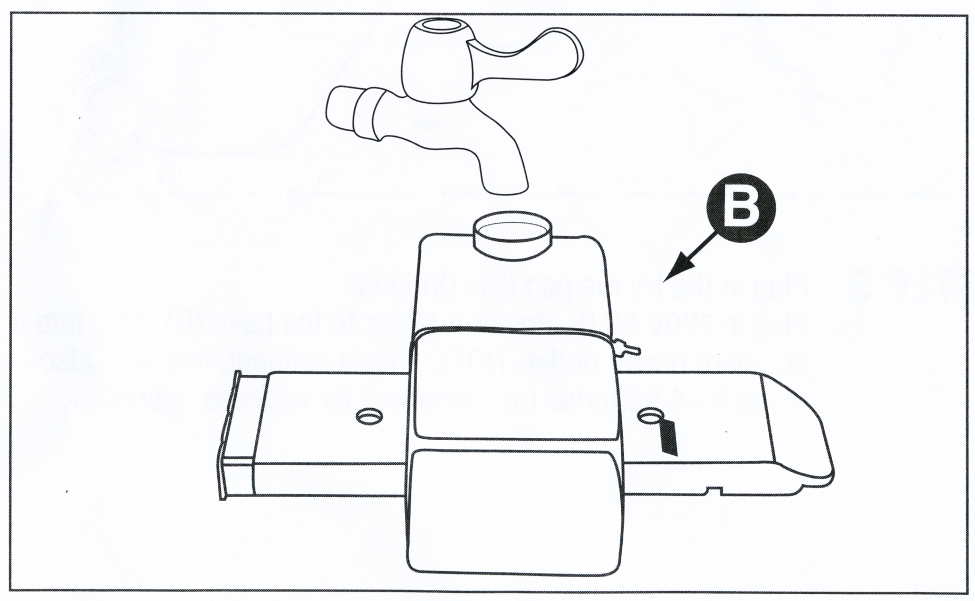

STEP 2 Fill water bottle and secure cap (B). Make sure the cap is tight to prevent leakage.
Note: do not over tighten cap.

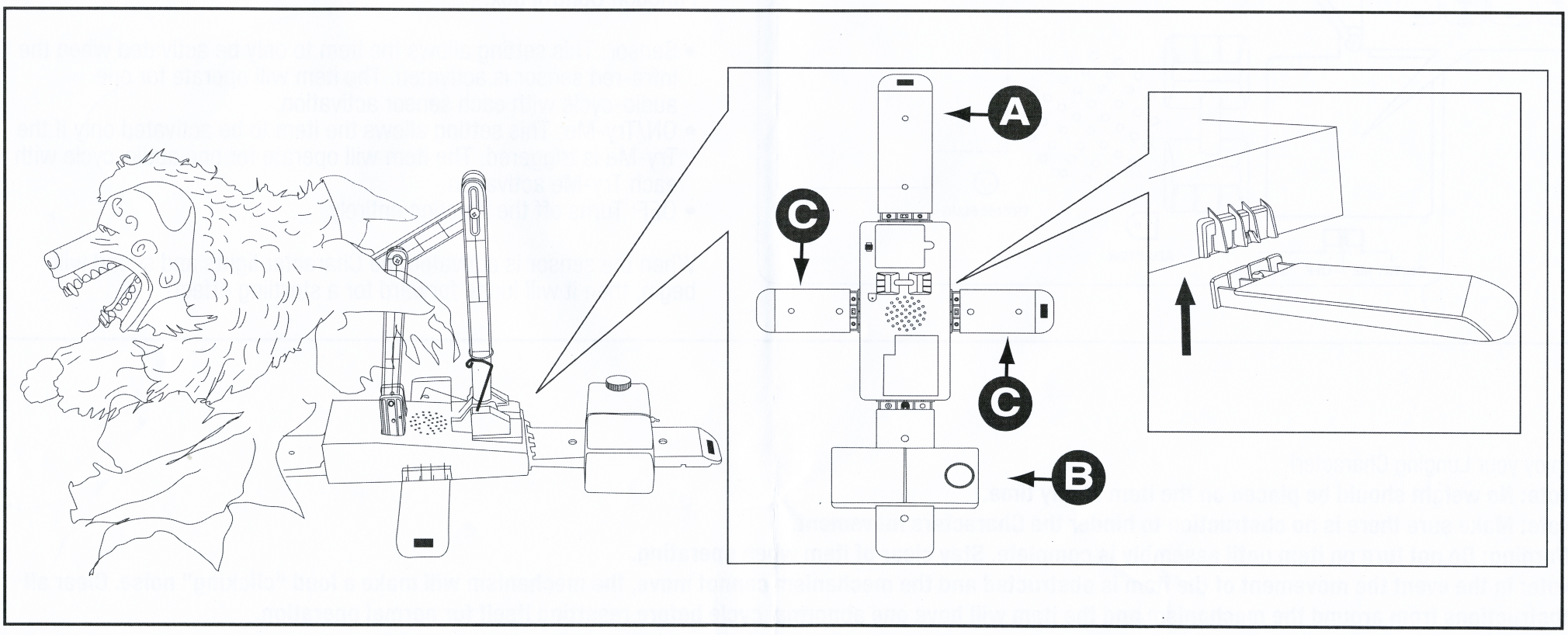

STEP 3 Attached legs (A) (B) (C) by sliding into the groove from the bottom of the base up until snapped into place.

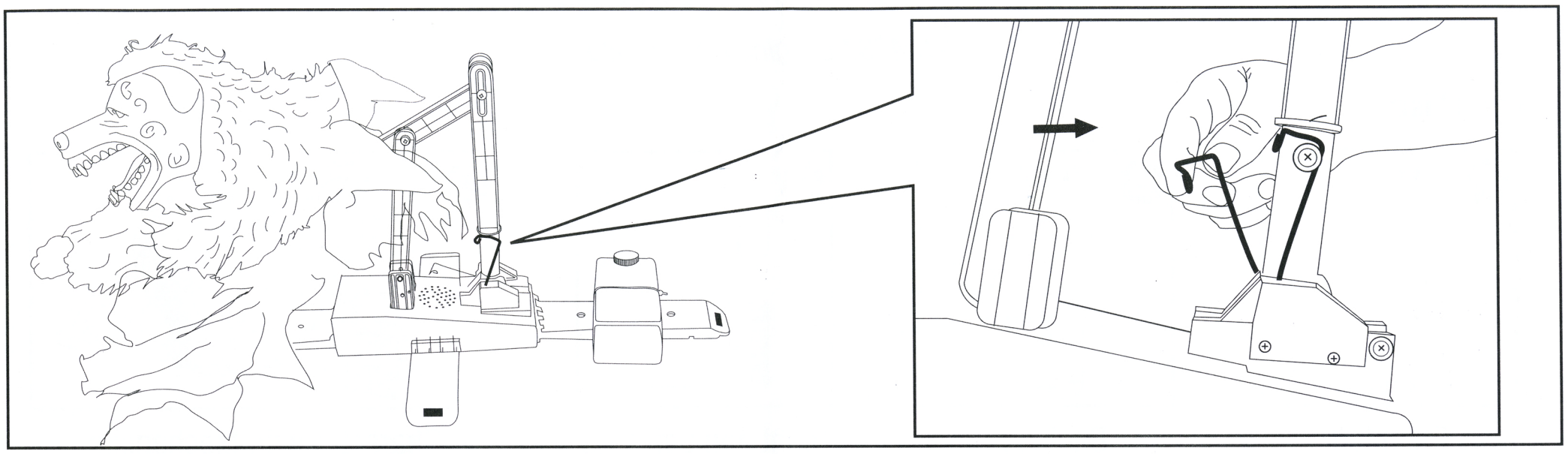

STEP 4 Lift Character until poles are vertical and attach 2 springs as shown.

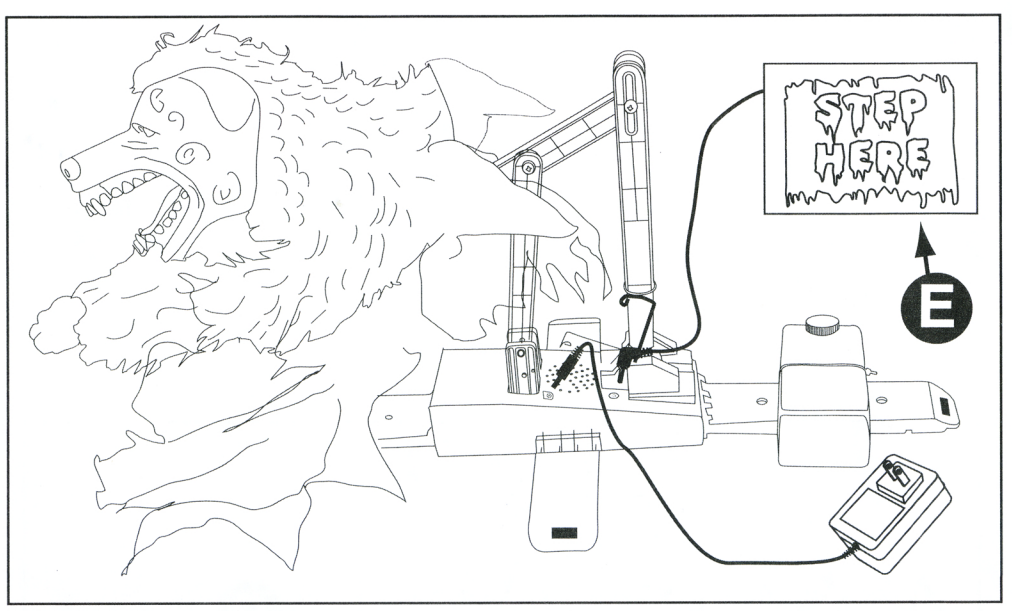

STEP 5 Plug in the try me pad (E)- Optional
Plug in 120V AC UL Power Adapter to the base (D), plug into a standard power outlet- NOTE: this is optional, this item also takes 4 AA batteries (not included) for wireless operation.

STEP 6 Attach costume to hook and loop fasteners at ends of each leg. (A) (B) (C)

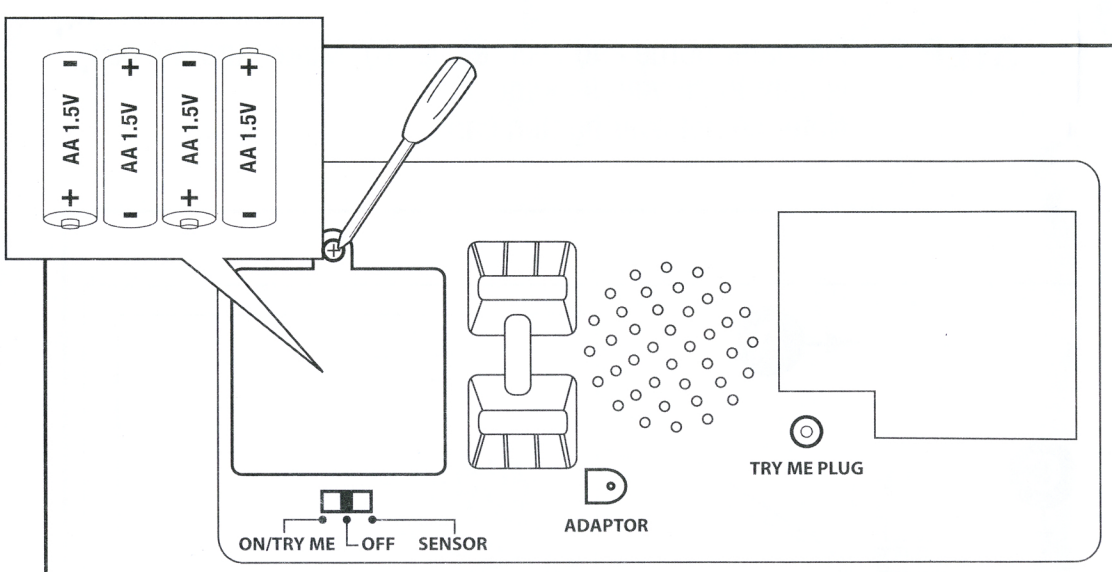

Operation Instructions:

Lunging Character has 3 settings which can be found on the main Function Control box.

- Sensor: This setting allows the item to only be activated when the Infra-red sensor is activated. The item will operate for one audio-cycle with each sensor activation.
- ON/Try-Me: This setting allows the item to be activated only if the Try-Me is triggered. The item will operate for one audio-cycle with each Try-Me activation.
- OFF: Turns off the function entirely.

When the sensor is activated the Character lights and sound will begin, then it will lunge forward for a startling effect!

Enjoy your Lunging Character!

Note: No weight should be placed on the item at any time.

Note: Make sure there is no obstruction to hinder the Characters movement.

Warning: Do not turn on item until assembly is complete. Stay clear of item when operating.

Note: In the event the movement of the item is obstructed and the mechanism cannot move, the mechanism will make a loud "clicking" noise. Clear all obstructions from around the mechanism and the item will have one abnormal cycle before resetting itself for normal operation.